linear dimension(Tolerances Standard GB/T 14486-2008)								—	▱	⊥
variable range	to 6	over 6 to 10	over 10 to 30	over 30 to 60	over 60 to 100	over 100 to 160	over 160 to	to 10	over 10 to 100	over 100 to
tolerance	±0.20	±0.30	±0.50	±0.70	±1.00	±1.30	±1.60	0.10	0.30	0.60

REVISION RECORD				
REV.	DESCRIPTION	ECN No.	APPROVED	DATE
A	新发行		CLF	25.04.26

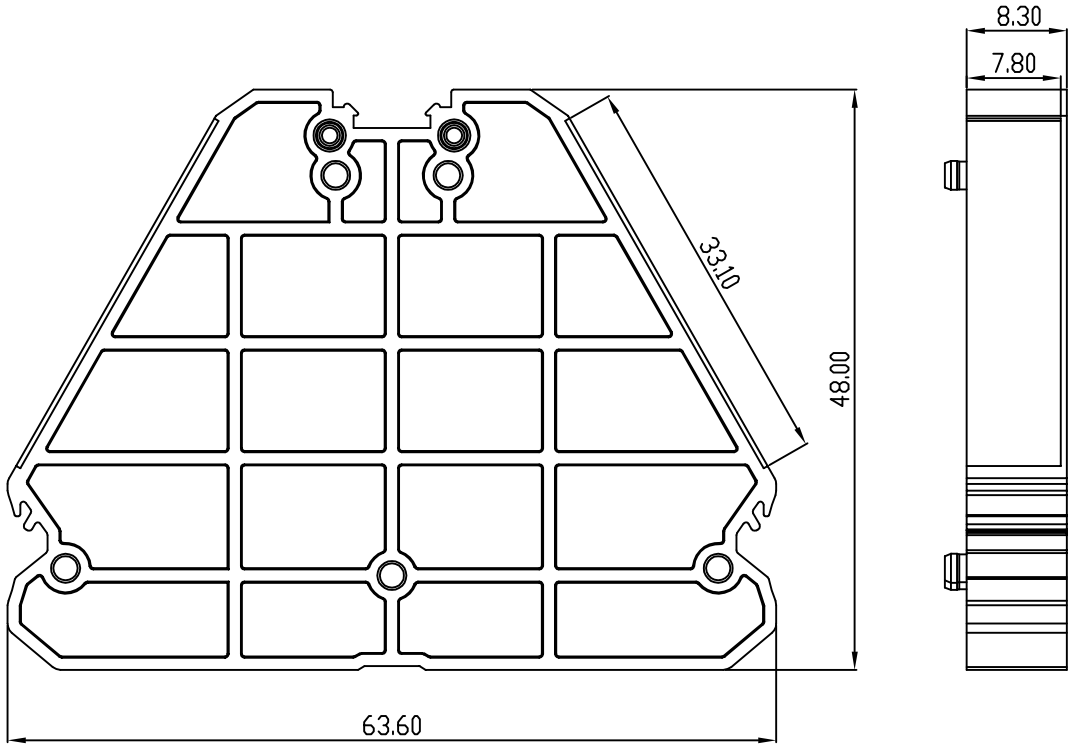

绝缘材料 Insulation Material	PA66
阻燃等级 Imflammability	UL94V-0
适用产品 Applicable products	KFPTRV4-FI KFPTRV4-PV KFPTRV4-PE KFPTRV4

颜色
1-灰色(GY)
2-蓝色(BU)
3-棕色(BR)

KFPTRV4拼板 - □

颜色

DES.	SJD	DATE	25.04.26	单位/UNITS	mm	尺寸/SIZE	A4	比例/SCALE	1:1	第三视角/THIRD ANGLE PROJECTION
CHK.	BY	DATE	25.04.26	KEFA® 慈溪市科发电子有限公司 CIXI KEFA ELECTRONIC CO., LTD						版本/REV: A
APP.	CLF	DATE	25.04.26							名称/TITLE: KFPTRV4拼板